WEINTEK

setup
www.setup.com.br
Fone: 19 2517.8900

MT8102iP1

HMI with 10.1" TFT LCD Display

Feature

- Boasts excellent performance with better operation experience compared to its predecessor.
- Weintek's compact HMI Series-iP has upgraded in every aspect to satisfy a variety of applications.
  - Equipped with ARM RISC 528MHz CPU.
  - Wide input voltage range: 10.5~28VDC
  - Seamlessly upgraded from EB8000 to EasyBuilder Pro.

Display	Display	10.1" TFT LCD
	Resolution	1024 x 600
	Brightness (cd/m^2)	350
	Contrast Ratio	500:1
	Backlight Type	LED
	Backlight Life Time	50,000 hrs.
	Colors	16.7M
	LCD Viewing Angle (T/B/L/R)	70/70/80/80
	Pixel Pitch (mm)	0.2175 (H) x 0.2088 (V)
Touch Panel	Type	4-wire Resistive Type
	Accuracy	Active Area Length(X)±2%, Width(Y)±2%
Memory	Flash	128 MB
	RAM	128 MB
Processor		32-bit RISC 528MHz
I/O Port	SD Card Slot	N/A
	USB Host	USB 2.0 x 1
	USB Client	N/A
	Ethernet	10/100 Base-T x 1
	COM Port	Con.A: COM2 RS-485 2W/4W, COM3 RS-485 2W Con.B: COM1 RS-232 4W, COM3 RS-232 2W*
	RS-485 Dual Isolation	N/A
	CAN Bus	N/A
	HDMI	N/A
	Audio Output	N/A
	Video Input	N/A
RTC		Built-in
Power	Input Power	10.5 ~ 28VDC
	Power Isolation	Built-in
	Power Consumption	1.3A@12VDC ; 650mA@24VDC
	Voltage Resistance	500VAC (1 min.)
	Isolation Resistance	Exceed 50MΩ at 500VDC
	Vibration Endurance	10 to 25Hz (X, Y, Z direction 2G 30 minutes)
Specification	PCB Coating	N/A
	Enclosure	Plastic
	Dimensions WxHxD	271 x 213 x 36.4 mm
	Panel Cutout	260 x 202 mm
	Weight	Approx. 1 kg
	Mount	Panel mount
Environment	Protection Structure	NEMA4 / IP65 Compliant Front Panel
	Storage Temperature	-20° ~ 60°C (-4° ~ 140°F)
	Operating Temperature	0° ~ 50°C (32° ~ 122°F)
	Relative Humidity	10% ~ 90% (non-condensing)
Certificate	CE	CE marked
Software		EasyBuilder Pro EasyAccess 2.0 (Optional)

*Only Tx & Rx (no RTS/CTS) may be used for COM1 RS-232 when COM3 RS-232 is also used.

Dimensions

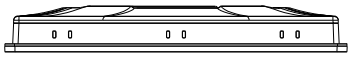

Top View

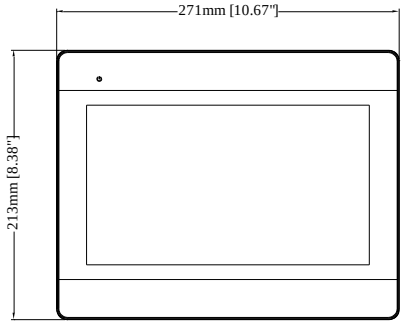

Front View

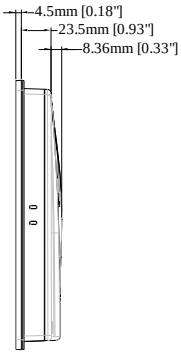

Side View

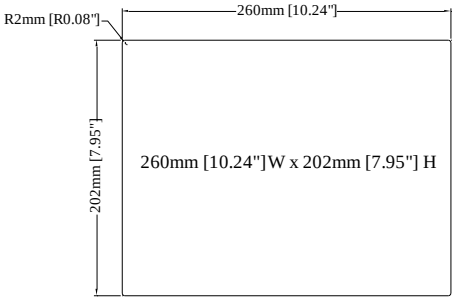

Cutout Dimensions

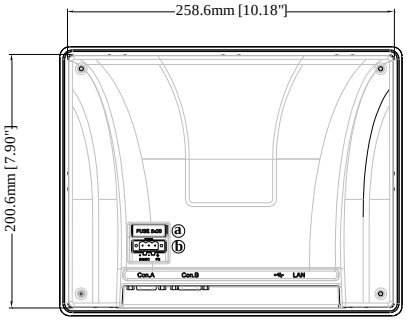

Rear View

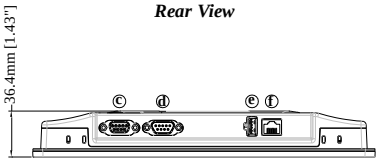

Bottom View

a.	Fuse
b.	Power Connector
c.	Con.A: COM2 RS-485 2W/4W, COM3 RS-485 2W
d.	Con.B: COM1 RS-232 4W, COM3 RS-232 2W
e.	USB Host Port
f.	LAN

Pin Assignment:

Con.B: COM1 / COM3 [RS232] 9 Pin, Male, D-sub

PIN#	COM1 [RS232]	COM3 [RS232]
1		
2	RxD	
3	TxD	
4		
5	GND	
6		
7	RTS	TxD
8	CTS	RxD
9	GND	

Con.A: COM2 / COM3 [RS485] 9 Pin, Female, D-sub

PIN#	COM2 [RS485]2W	COM2 [RS485]4W	COM3 [RS485]
1	Data-	Rx-	
2	Data+	Rx+	
3		Tx-	
4		Tx+	
5	GND		
6			Data-
7			
8			
9			Data+

setup
www.setup.com.br
Fone: 19 2517.8900